Electric Pallet Jack

CBD15W-E / 20W-E



- The adoption of a floating balance wheel prevents side-to-side swaying of the truck when in motion, ensuring smooth travel without swing and excellent anti-vibration properties.
- The entire balance wheel assembly is removable, simplifying maintenance.
- The rocker arm mechanism has an integral structure that effectively improves structural strength. It also distributes and adjusts the force from the forks evenly, reducing the noticeable deflection at the fork's height after prolonged use and under load.
- The drive wheel features a horizontal structure that raises the motor's position off the ground. This prevents water, dust, and grease from adhering to the motor, effectively improving the working condition of the motor.
- The truck is equipped with a height limit switch to enhance safety and operational control.

Model		CBD15W-E	CBD20W-E
Drive type		Electric	Electric
Rated capacity/rated load	Q(lbs)	3300	4400
Load centre distance	c (in)	23.6	23.6
Load distance, centre of drive axle to fork	x (in)	37.4/40.2	36.8/39.6
Wheelbase	y (in)	50.7/53.4	50.5/53.3
Service weight	lbs	452	485
Axle loading, laden front/rear	lbs	1113/2646	1323/3572
Axle loading, unladen front/rear	lbs	364/88	375/110
Wheel type		Polyurethane	Polyurethane
Tire size, drive wheel	in	Φ7.7*2.8	Φ7.7*2.8
Tire size, fork roller	in	Φ3.1*3.7/2.9*3.7(Single) Φ3.1*2.8/2.9*2.8(Tandem)	Φ3.1*3.7/2.9*3.7(Single) Φ3.1*2.8/2.9*2.8(Tandem)
Wheels, number front/rear (x = driven wheels)		1X+2/2(4)	1X+2/2(4)
Tread, front	b10 (in)	11.2	11.2
Tread, rear	b11 (in)	14.2/15.4/20.7	14.2/15.4/20.7
Max. lift height	h3(in)	7.5	7.5
Height drawbar in driving position min./max.	h14(in)	27.5/49.2	27.5/49.2
Height, lowered	h13 (in)	3.0	3.0
Overall length	l1 (in)	65.1/67.9	65.1/67.9
Length to face of forks	l2 (in)	19.8	19.8
Overall width	b1/b2 (in)	27/22.1	27/22.1
Fork dimensions DIN ISO 2331	s / e / l (in)	2.1/6.3/45(48)	2.1/6.3/45(48)
Fork spread	b5 (in)	20/21/27	20/21/27
Ground clearance, centre of wheelbase	m2 (in)	1.2/0.8	1.2/0.8
Aisle width for pallets 40x48" crossways	Ast (in)	89/91.7	88/90.9
Aisle width for pallets 31x48" lengthways	Ast (in)	83.8/93.1	83.5/84.8
Turning radius	Wa (in)	57.2/56.1	56.7/59.5
Travel speed, laden/unladen	mph	2.7/3	2.7/3
Lift speed, laden/unladen	in/s	1/1.2	1/1.2
Lowering speed, laden/unladen	in/s	1.4/1	1.4/1
Max. gradeability, laden/unladen	%	5/20	5/20
Service brake		Electromagnetic	Electromagnetic
Drive motor power S2 60 min	kW	0.65	0.75
Lift motor power S3 15%	kW	0.8	0.8
Battery voltage/nominal capacity	V/Ah	24/65	24/105
Battery weight	lbs	79	108

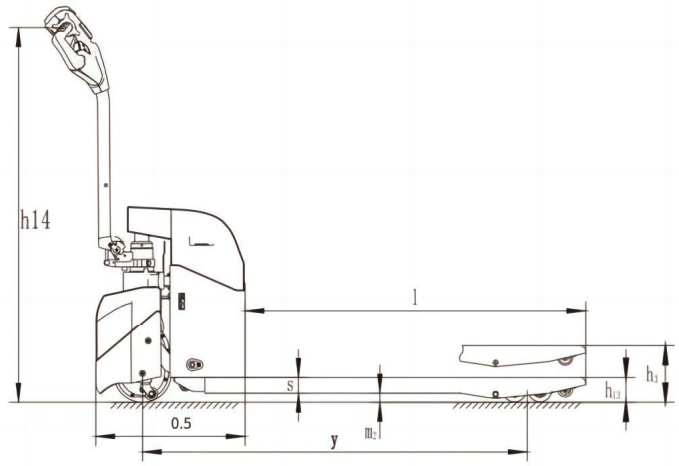

(inch)

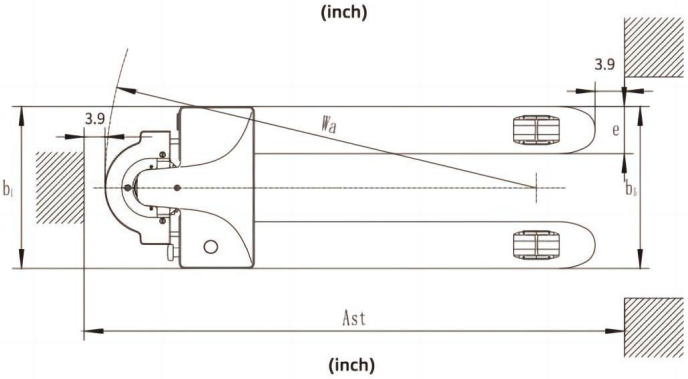

(inch)