Electric Pallet Jack

CBD15W-II LI / 20W-II LI



- Truck with low noise, no pollution, energy saving, meet environmental protection requirements.
- Appearance with small size, simple structure and compact design.
- The integrated rocker arm with high performance, intensify the structural strength and stability of the truck.
- The multi -function control handle combines the functions of lifting, lowering, forward, backward, emergency reverse, electric lock, information display, etc.
- The new handle offers the low speed moving function when handle is on upright position.
- Side-way battery can be replaced quickly.
- Truck with Large diameter plunger cylinder, low hydraulic system pressure, provides low failure rate and long service life.
- The truck with Lifting overload protection, lifting electrical limit at max height, emergency reverse button. Safe and reliable.

Model		CBD15W- II Li	CBD20W- II Li
Drive type		Electric	Electric
Rated capacity/rated load	Q(lbs)	3300	4400
Load centre distance	c (in)	23.6	23.6
Distance from fork roller center to fork surface	x (in)	40.2	40.2
Wheelbase	y (in)	50	50
Service weight	lbs	297	308
Axle loading, laden front/rear	lbs	1466/2138	1918/2800
Axle loading, unladen front/rear	lbs	209/88	216/93
Wheel type		Polyurethane	Polyurethane
Tire size, drive wheel	(in)	Φ8.3*2.8	Φ8.3*2.8
Tire size, fork roller	(in)	Φ3.2*3.7	Φ3.2*3.7
Wheels, number front/rear (x = driven wheels)		1x2	1x2
Tread, rear	b11 (in)	15.4/20.5	15.4/20.5
Max. lift height	h3 (in)	4.3	4.3
Height drawbar in driving position min./max.	h14 (in)	25.6/44.7	25.6/44.7
Height, lowered	h13 (in)	3.0	3.0
Overall length	l1 (in)	60.8/63.6	60.8/63.6
Length to face of forks	l2 (in)	15.6	15.6
Overall width	b1 (in)	27	27
Fork dimensions	s/ e/ l (in)	2.8/6.3/48	2.8/6.3/48
Fork spread	b5 (in)	27	27
Ground clearance, centre of wheelbase	m2 (in)	1.1	1.1
Aisle width for pallets 40x48" crossways	Ast (in)	84.6/87	84.6/87
Aisle width for pallets 31x48" lengthways	Ast (in)	79.3/80.9	79.3/80.9
Turning radius	Wa (in)	53/55.7	53/55.7
Travel speed, laden/unladen	mph	2.7/2.8	2.9/3
Lift speed, laden/unladen	in/s	1/1.2	0.8/1
Max. gradeability, laden/unladen	%	6/20	6/20
Service brake		Electromagnetic	Electromagnetic
Drive motor power	kW	0.75	1
Lift motor power	kW	0.8	0.8
Battery voltage/nominal capacity	V/Ah	24/20	48/20
Controller type		DC Brush	DC Brush

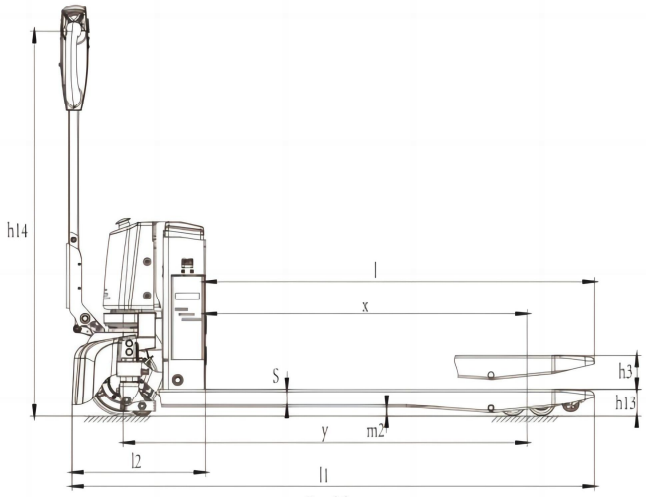

(inch)

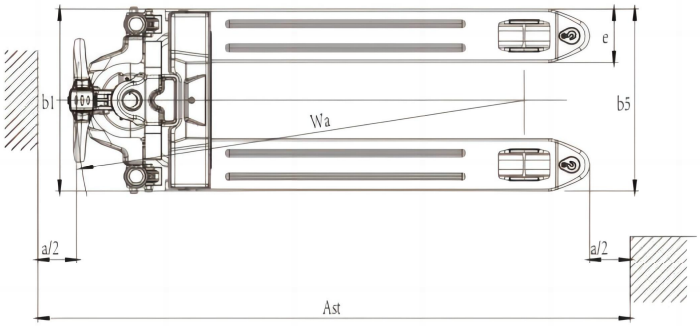

(inch)